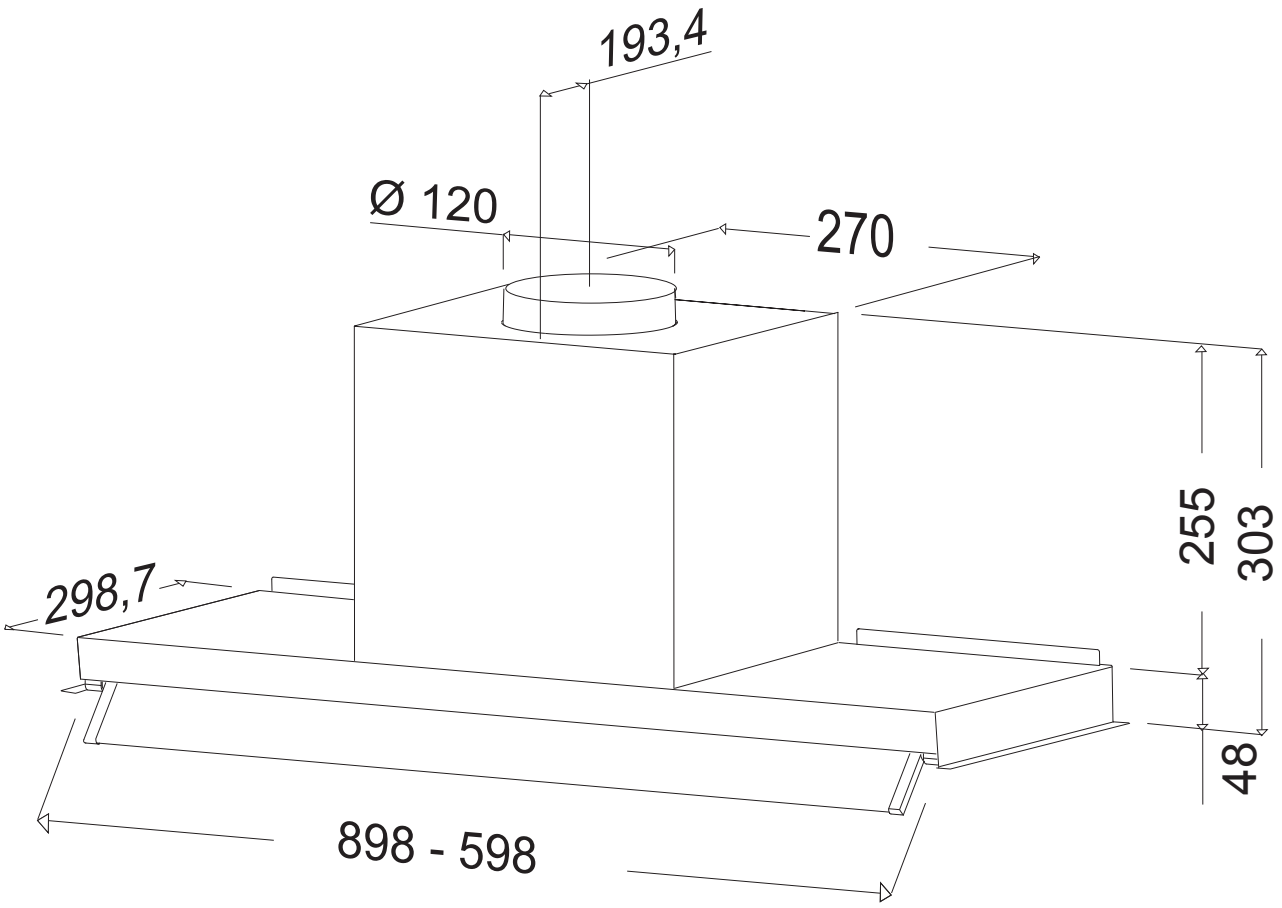Compass