EURORAMA
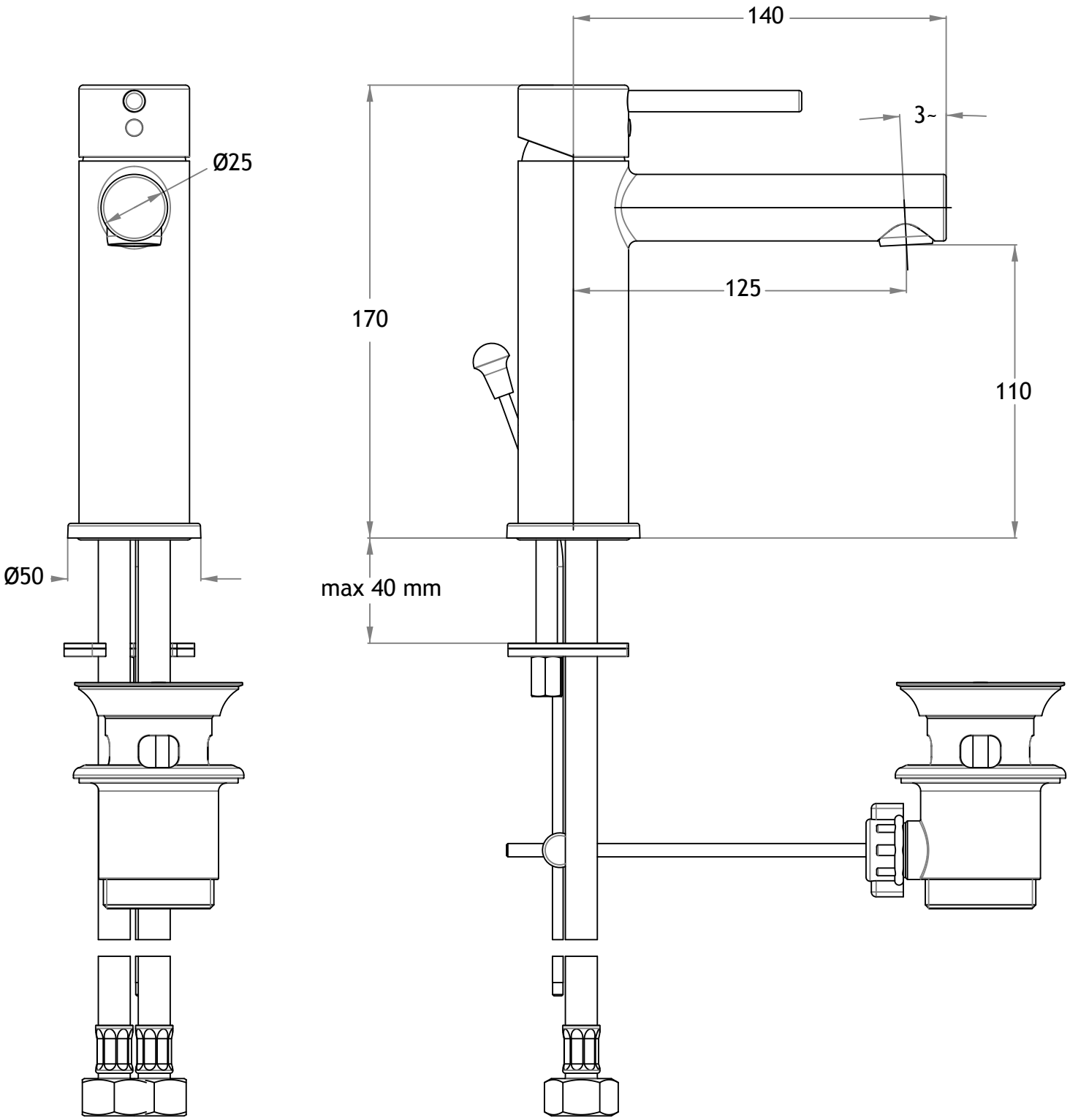
Tonda 145310