Technical Draft
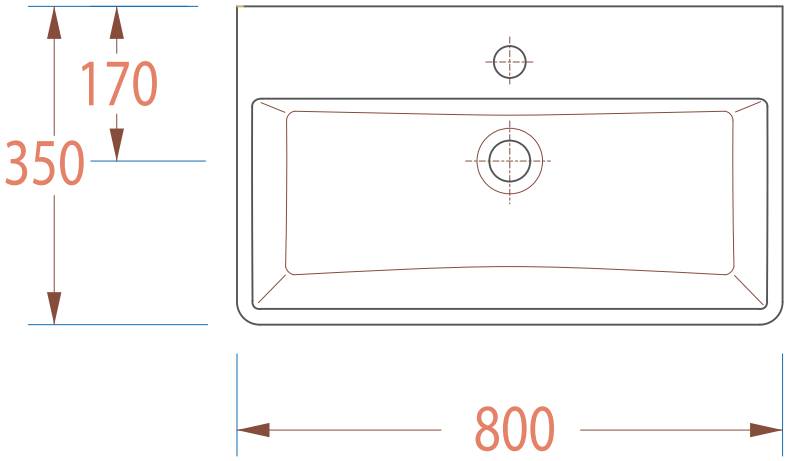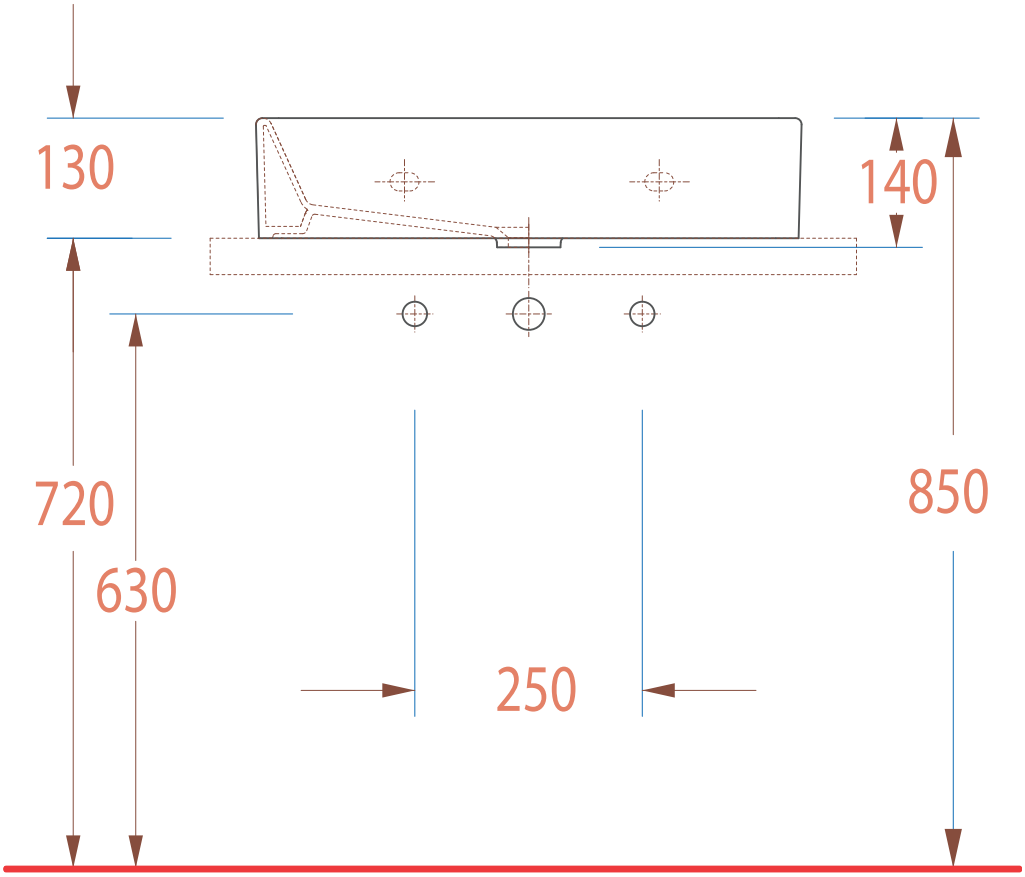
SEREL®